DATASHEET

TECHNICAL INFORMATION

PARTTEAM & OEMKIOSKS®

KARISMA

Industrialize your Dreams !

Made in Portugal

Multimedia Kiosks and Digital Billboards are developed and produced in Portugal.

The sucess of our company in the internacional market shows us that we have developed and produce excellent products and we should therefore be proud and confident in the future.

Patented Product / Design

MULTI-TOUCH INTERACTIVE TABLE

This table was developed to support the new technologies on the market, and can use SAW, Infrared or even ProCap technology displays with the possibility of the upper surface being entirely made of glass.

We are talking about a fantastic kiosk / interactive table with interactive single or multi-touch displays.
It is possible to use this equipment for various applications from multimedia applications (videos, images, games, etc.), interactive directories, virtual interactive service, musical or video jukebox, applications for museums, etc..

EXPERT FINISHINGS

Every detail has been thought through in detail in terms of design. The clean and rounded lines give it an unprecedented elegance in the multimedia kiosk sector. The metallic structure was also designed in such a way that what matters is to highlight the display. The black frame of the glass is intended to allow the use of displays with wider frames, so that they are completely hidden from the user.

The potential of the KARISMA model allows it to be used in the presentation of multimedia contents as well as a simultaneous interactive use.

The dimensions and specifications are given in graphical representation and may not correspond to the reality of the equipment. The dimensions show are approximate and represent the equipment for a certain size display. The final dimension may vary depending display model and other components used. The client must request technical drawing for final validation (measures and specifications).

PARTTEAM & OEMKIOSKS®

MODERN DESIGN IN THE PROJECTION OF MULTIMEDIA AND INTERACTIVE CONTENT

KARISMA

ITERACTIVE TABLE

PARTTEAM & OEMKIOSKS®

INCREDIBLY MODERN

The simple and sober lines give the kiosk an incredibly modern look. This, combined with the compact and solid structure, conveys an image of simplicity, style and robustness.

The dimensions and specifications are given in graphical representation and may not correspond to the reality of the equipment. The dimensions show are approximate and represent the equipment for a certain size display. The final dimension may vary depending display model and other components used. The client must request technical drawing for final validation (measures and specifications).

KARISMA

ITERACTIVE TABLE

PARTTEAM & OEMKIOSKS®

INTERACTIVE TECHNOLOGY

KARISMA was developed to allow the integration of any type of touch screen, creating an interactive device for interior.

PARTTEAM & OEMKIOSKS has a unique experience in the field of interactive technologies, which allows them to be integrated into KARISMA in an effective and professional manner.

MULTI TOUCH

Broader touch technologies can be used, each optimized for different operational characteristics and environments to meet the needs of customer applications such as SAW (Surface Acoustic Wave), Capacitive, Infrared, Optical, Projected Capacitive (ProCap), etc.

The interactive KARISMA is available from 22'' to 103", from single touch to 40 independent touches, and with the possibility of interaction with finger, hand, gloves and pointer.

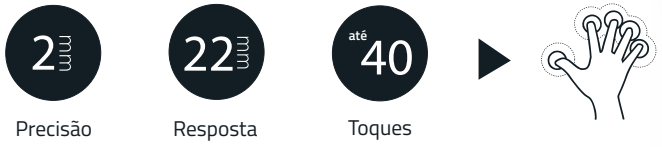

The dimensions and specifications are given in graphical representation and may not correspond to the reality of the equipment. The dimensions show are approximate and represent the equipment for a certain size display. The final dimension may vary depending display model and other components used. The client must request technical drawing for final validation (measures and specifications).

VERSATILE AND MODERN

The versatility of this model is also one of its strong points, since several components can be easily added, such as printers, webcams, scanners, card readers and much more...

The dimensions and specifications are given in graphical representation and may not correspond to the reality of the equipment. The dimensions shown are approximate and represent the equipment for a certain size display. The final dimension may vary depending display model and other components used. The client must request technical drawing for final validation (measures and specifications).

PARTTEAM & OEMKIOSKS®

KARISMA

TECHNICALSPECIFICATIONS

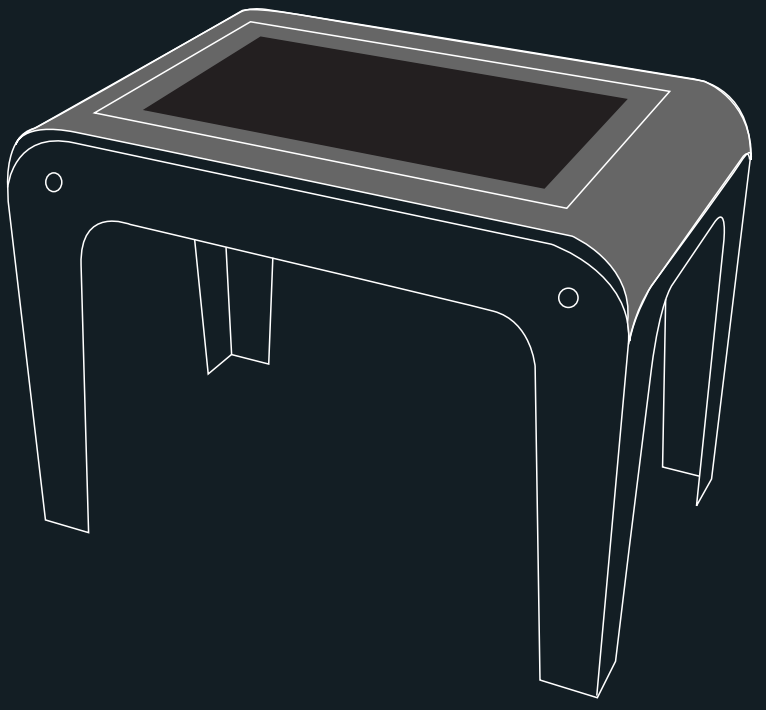

KARISMA

TECHNICALSPECIFICATIONS

PARTTEAM & OEMKIOSKS®

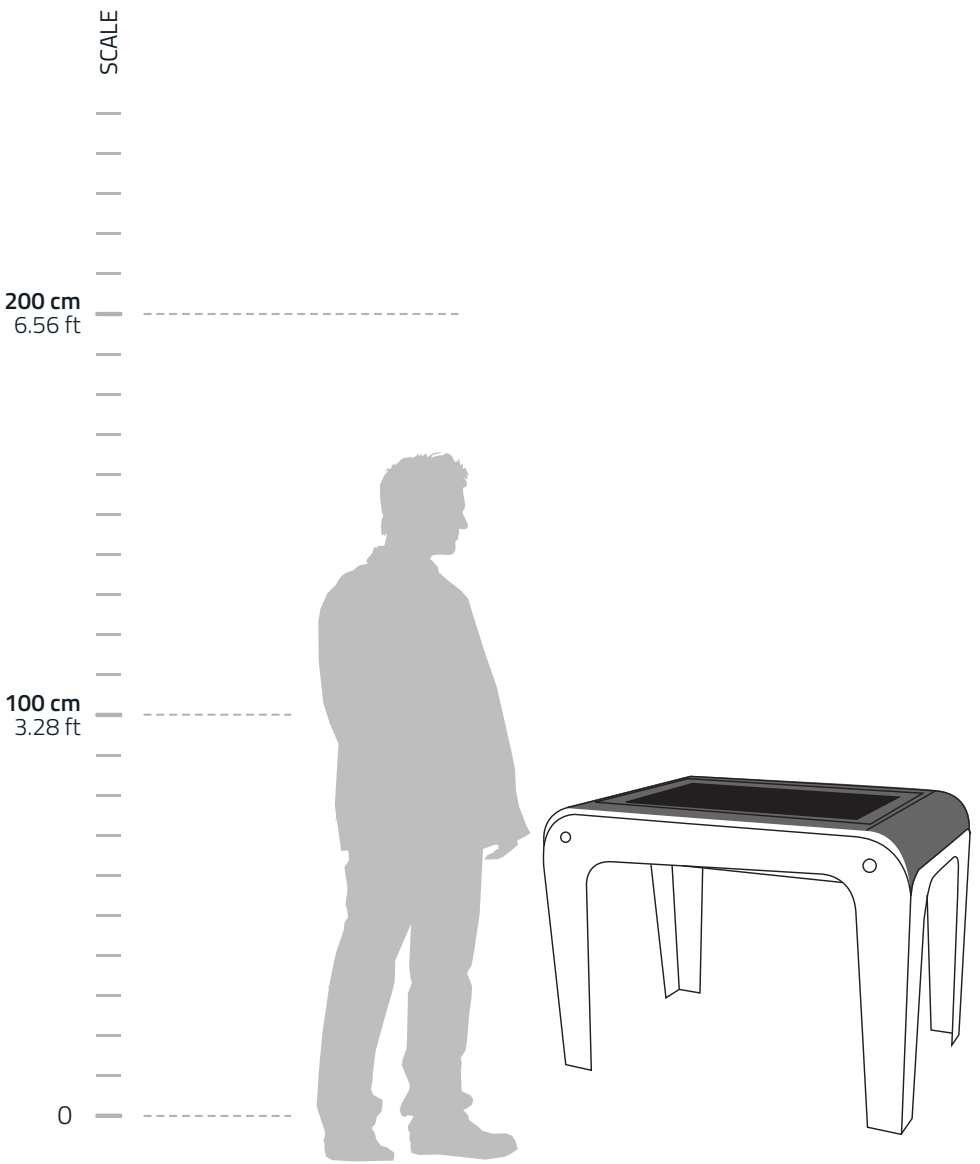

TECHNICAL **FEATURES**

Type

- Outdoor/Indoor

Materials

- Painted Steel
- Stainless Steel

Options

- WI-FI
- Webcam
- Interactive Display
- Bluetooth
- Speakers
- Dipslay MultiTouch
- 2 Side Display
- Gorilla Glass

(Other options avaiable upon request)

The dimensions and specifications are given in graphical representation and may not correspond to the reality of the equipment. The dimensions show are approximate and represent the equipment for a certain size display. The final dimension may vary depending display model and other components used. The client must request technical drawing for final validation (measures and specifications).

KARISMA

TECHNICALSPECIFICATIONS

PARTTEAM & OEMKIOSKS®

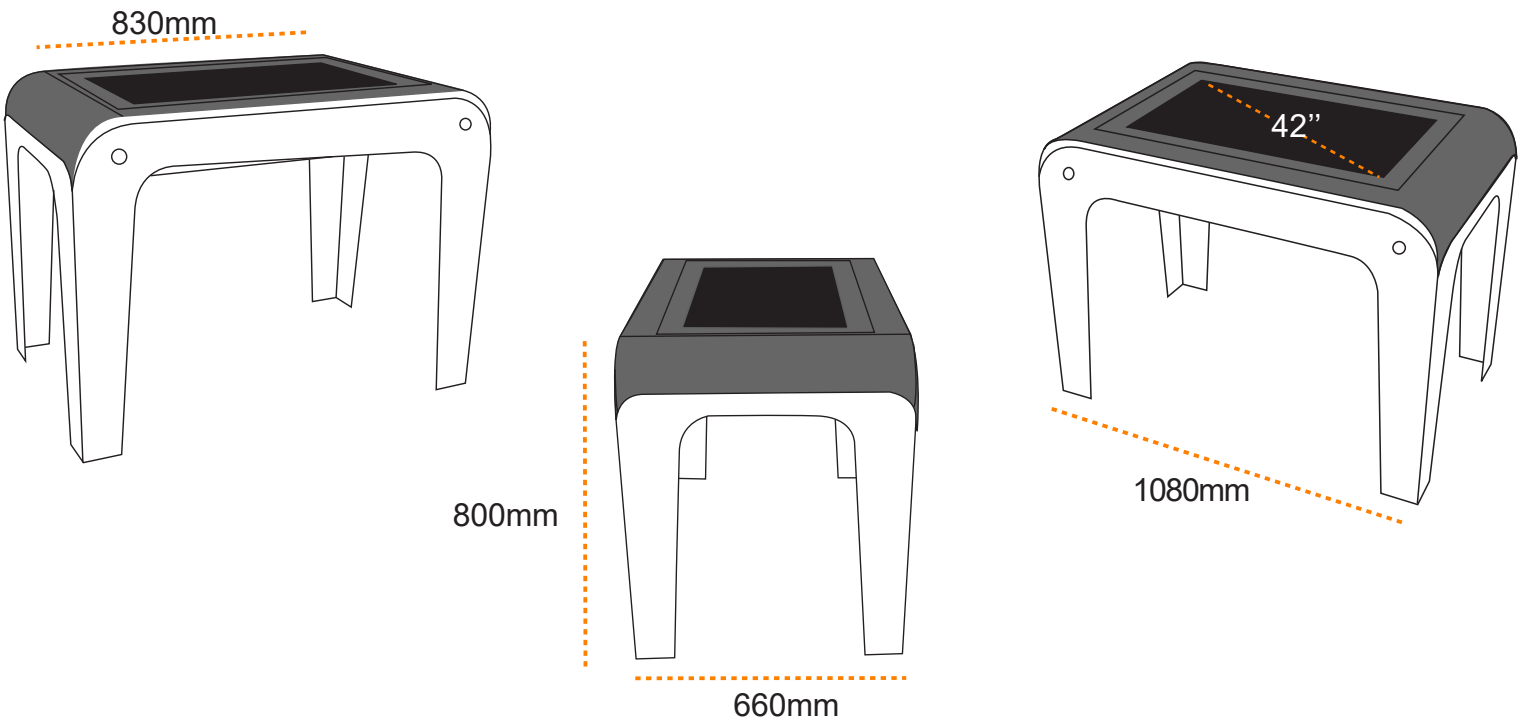

(Approximate and variable measures, depending on the customization of the kiosk)

The dimensions and specifications are given in graphical representation and may not correspond to the reality of the equipment. The dimensions show are approximate and represent the equipment for a certain size display. The final dimension may vary depending display model and other components used. The client must request technical drawing for final validation (measures and specifications).

KARISMA

TECHNICALSPECIFICATIONS

PARTTEAM & OEMKIOSKS®

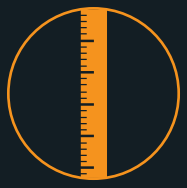

A.1455 L.615 P.220 mm
(aprox.)

Display até
105”

70 Kg.
(aprox.)

Chapa de
1,5mm / 2mm

Colunas de som
integradas

Aço Inox AISI304/316,
Aço Lacado, MDF (Cores RAL)

OPCIONAL

- Displays de 32” a 105”
- Computador Atom, Dual Core, Core i3, i5 ou i7
- Sistemas Operativos Actualizados: Windows, Linux, Mac *
  * depende do tipo de tecnologia utilizada
- Touch screen (SAW, Infrared, ProCap)
- Disponível em qualquer cor RAL
- Total personalização
- Wireless - WLAN
- Impressora de tickets

The dimensions and specifications are given in graphical representation and may not correspond to the reality of the equipment. The dimensions show are approximate and represent the equipment for a certain size display. The final dimension may vary depending display model and other components used. The client must request technical drawing for final validation (measures and specifications).

PARTTEAM & OEMKIOSKS®

Contact us

We have the answers to your questions.

+351 304 501 711

+351 252 378 589

PARTTEAM & OEMKIOSKS
(M.S.N.F. Soluções Informáticas)

R. Nova de Nespereira, Pavilhão 10, 4470-287
Lagoa - Vila Nova de Famalicão - Portugal

sales@oemkiosks.com

See Online

See specifications and get all information about our featured products.

www.oemkiosks.com

All texts, photos, illustrations and other elements contained in this presentation are protected by law, under the Copyright and Related Rights Code, expressly prohibited from being copied, reproduced and disseminated, as well as their commercial use, without express authorization of the PARTTEAM & OEMKIOSKS, regardless of the means used, with the exception of the right of quotation defined by law.