Wise Kiosk

Datasheet

oemKIOSKS
Your white label kiosks company

Touch...The Sky

Welcome to oemKIOSKS

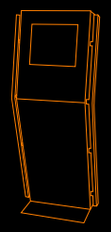

Version: 17_02_V1

Wise

Standup indoor kiosk

Technical Specifications
Wise Kiosk

Dimensions: H1500 x W500 x D90,100
Weight: aprox. 48 Kg.

Wise model was developed for indoors use to work as stand up kiosk.

This model can be manufactured in stainless steel or painted steel (available in all RAL colors) using steel plate of 1,5mm to 2,5mm which ensures the stability and rigidity of the all structure.

This wise model is normally equipped with a tactile monitor and can be delivered with a anti vandalic keyboard with trackball, card reader, webcam, coin acceptor, tickets printer, handset phone and other peripherals. This model can be equipped with a anti vandalic monitor.

The area where the PC will be installed has security locks, general switch and is easily detachable, leaving enough space for the installation and access to a minitower PC.

On the side of the monitor are two speakers and the kiosk has 2 independent systems of ventilation, one for the monitor and other for the PC.

The Wise Model is normally equipped with a Atom CPU with a 160 GB hard drive, 1 Gb Ram Memory, a 128Mb graphic card and a 10/100 mb ethernet, Windows 7 Starter (Optional: dual core CPU, Wirelless, Bluetooth, Windows XP Pro, 2gb Ram).

oemKIOSKS
Your white label kiosks company

CE

Wise
Standup indoor kiosk

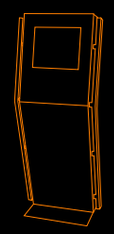

Wise

Distance comparison and main features

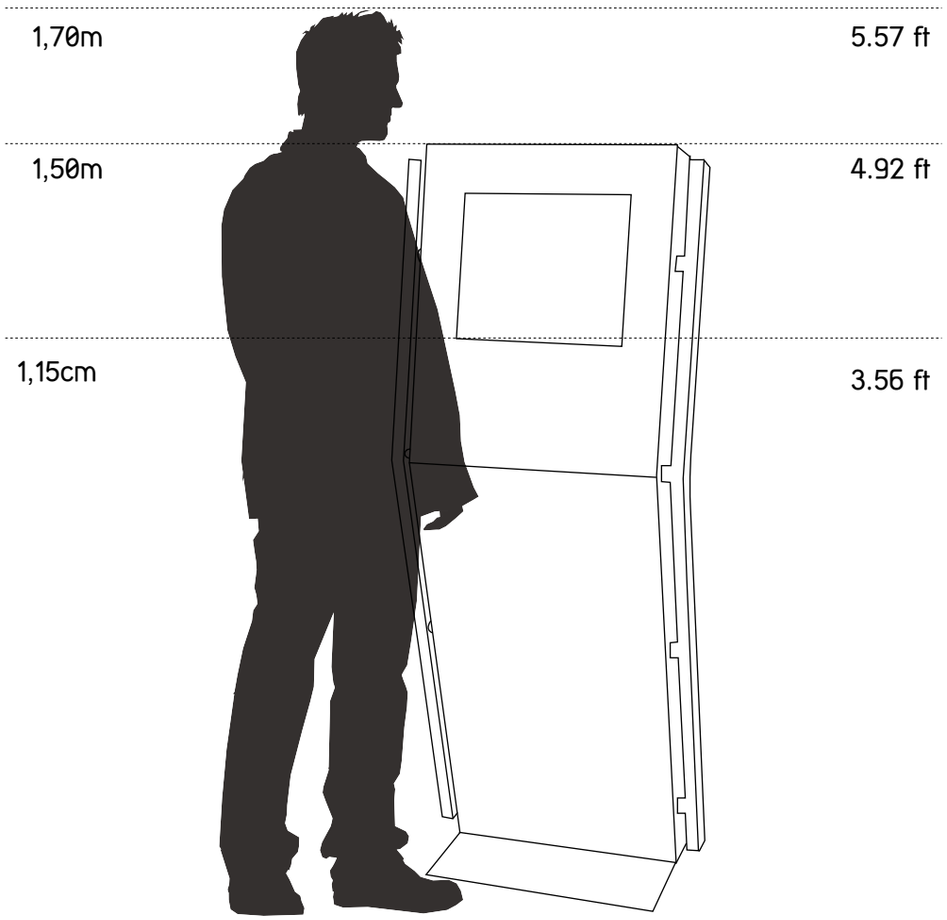

Type

- [x] Indoor

Materials

- [x] Painted Steel
- [x] Stainless Steel
- [x] MDF

Options

- [x] Webcam
- [x] Ticket Printer
- [x] Card Reader
- [x] Antivandalic Keybard
- [x] Bar Code Scanner
- [x] Handset Phone
- [x] Coin Validator
- [x] Bill Validator
- [x] Ykiosk Software

oemKIOSKS
Your white label kiosks company

CE

Wise
Distance comparison and main features

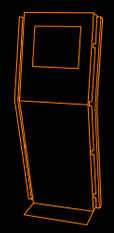

Wise

Kiosk measures

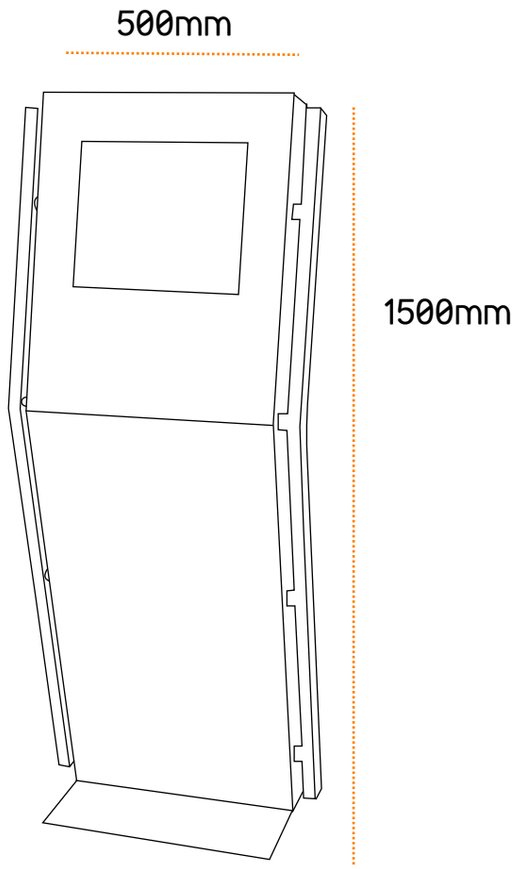

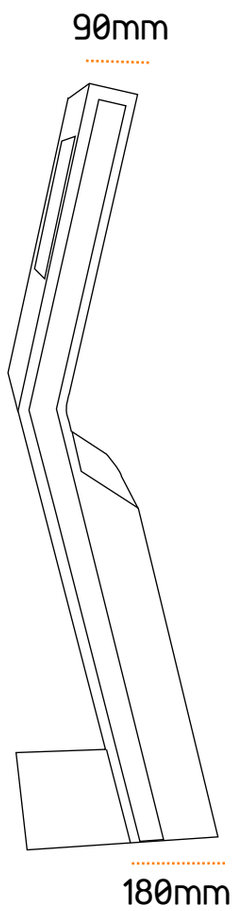

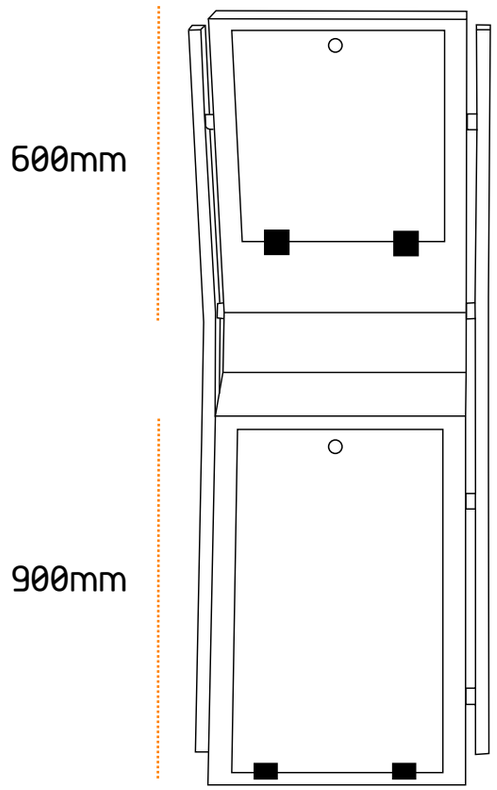

oemKIOSKS
Your white label kiosks company

CE

Wise
Kiosk measures

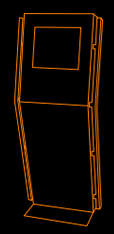

Wise

Technical data

Dimensions:

- 17 inch (resolution: 1280 x 1024 Pixel)
- H1500 W500 D(90,180)

Weight:

48 kg

Configuration:

- Standup indoor kiosk
- Stainless steel AISI304 or painted steel (RAL Colors)
- Steel plate of 1,5mm to 2,5mm
- 17” XGA touchscreen display (resistive)
- Integrated speakers

Optional:

- 19’’ to 24’’ Displays
- Atom or Dual Core PC computer
- Microsoft Windows 7 Professional
- Ykiosk software package
- Antivandalic keyboard
- Touch screen (SAW - antivandalism)
- Wireless networking - WLAN
- Bluetooth functionality
- Webcam

- Other components can be integrated changing kiosk dimensions: ticket printer, coin validator, bill validator, card readers, antivandalic keyboard, proximity sensor, etc.

oemKIOSKS
Your white label kiosks company

CE

Wise
Technical data

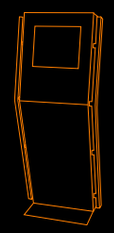

oemKIOSKS | Your white label kiosk company

This document is provided only for information purposes. The presented information is subject to change without prior notice, given the constant evolution of content.
THE PARTTEAM GROUP is not responsable for any errors or omissions in this document, based on the information it contains, as a result of its publication.

oemKIOSKS
Your white label kiosks company

oemKIOSKS | Partteam Group Portugal | Rua Nova da Nespereira, Pavihão 10 | 4770 -287 Lagoa - Vila Nova de Famalicão
tel: +351 252 378 589 | +351 252 327 185 | fax: + 351 252 378 591 | Portugal
www.oemkiosks.com | oem@oemkiosks.com